marantz®

TT-4000

service manual

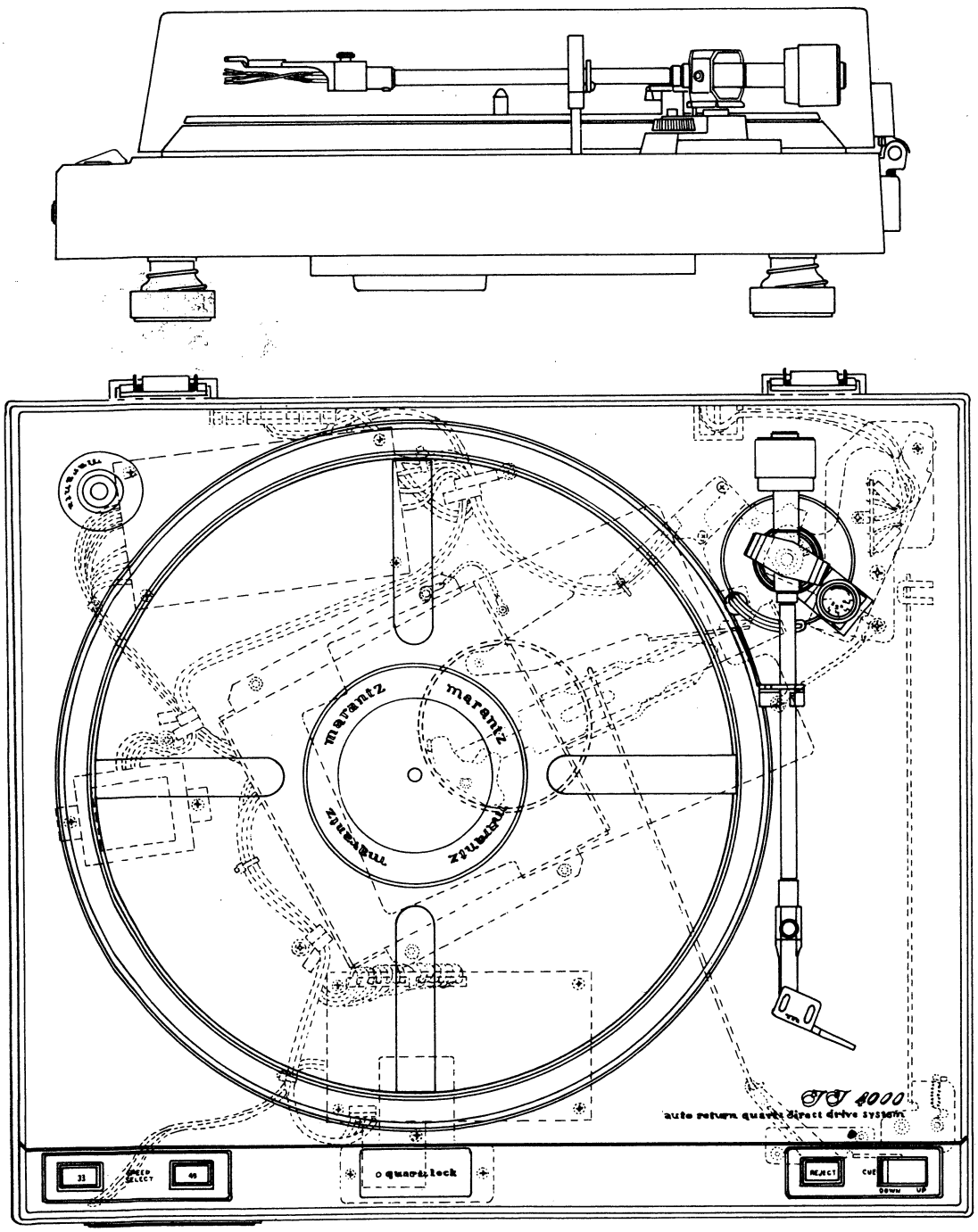

TT-4000

© Copyright 1980 Superscope, Inc.
All rights reserved.
LITHO-U.S.A. 1-80

Superscope Technical Services

MARANTZ DESIGN AND SERVICE

Using superior design and selected high grade components, MARANTZ Company has created the ultimate in stereo sound. Only original MARANTZ parts can insure that your MARANTZ product will continue to perform to the specifications for which it is famous.

Parts for your MARANTZ stereo are generally available within 72 hours throughout the nation via a toll-free line to our National Parts Depot in California. The sales professionals who take your call immediately refer to their own desk top computer terminal and can quickly determine the availability and price information you require. If, for some reason, your order should exceed our available stock, we usually can instantly provide an alternate replacement part or current delivery information. When the order is placed and confirmed, the computer simultaneously generates "hard copy" orders at the distribution center. As hard copies come directly from the computer to the national parts depot, your requested stock is assembled and prepared for shipment and placed on the first available carrier for delivery to you.

ORDERING PARTS

Phone orders will eliminate mail delays, and we encourage the use of this method. If you order by mail, use MARANTZ parts order forms which are available from our National Parts Depot located at the following address:

SUPERSCOPE NATIONAL PARTS DEPARTMENT
20525 Nordhoff Street
Chatsworth, California 91311
Phone: 1-800-423-5108
1-213-998-9333

The following information must be supplied to eliminate delays in processing your order:

1. Complete address.
2. Complete part numbers.
3. Complete description of parts.
4. Model number for which part is required (indicate MARANTZ).
5. Account number (for account customers only).

Direct consumers will be provided with the current retail price quotation on available parts in order to advise them of the cost of the parts and shipping.

OVERSEAS PARTS ORDERING

Parts may also be ordered from the following overseas addresses:

CANADA

Superscope Canada, Ltd.
3710 Nashua Drive
Mississauga
Ontario, Canada L4V1M5

AUSTRALIA

Superscope (Australasia) Pty., Ltd.
32 Cross Street (P.O. Box 604)
Brookvale 2100 N.S.W.
Australia

JAPAN

Marantz Japan, Inc.
3622 Kamisuruma
Sagamihara Shi
Kanagawa, Japan

EUROPE

Superscope Europe, S.A.
Avenue Leopold III, 2
7120 Peronnes-Lez-Binche
Belgium

Marantz France
Rue Louis Armand 9
92600 Asnieres
Hauts-de-Seine
France

Marantz Audio U.K. Ltd
London Road, 203
Staines
Middlesex
England

Superscope GmbH
Max-Planck-Strasse 22
D-6072 Dreieich 1
West Germany

All of the above locations are fully equipped to take care of your total service needs. Because various countries have differing configuration requirements, it is necessary that you contact the service facility in your particular country. In the event that there is no service location listed for your country, please contact the nearest facility for the necessary assistance.

INTRODUCTION

This service manual was prepared for use by Authorized Warranty Stations and contains service information for a Marantz Semi-Automatic Quartz Lock TT-4000 Turntable. Service information and voltage data included in this manual are intended to be used by experienced service technicians, knowledgeable in Turntable designs and Service. All instructions should be read and no attempt to repair the circuits or mechanisms should be made until complete operation is understood.

The parts list in this manual pertains to five different areas. Be sure that part numbers for your respective area are correct before parts orders are placed. A simple description is provided for parts which can be purchased locally or through the Marantz Parts Facilities. Refer to the Marantz Design and Service Section of this manual for correct parts ordering methods.

TT-4000 SERVICE MANUAL CONTENTS

SUBJECT	PAGE
MARANTZ DESIGN AND SERVICE	1
CARTRIDGE WIRE COLOR CODE	2
STYLUS OVERHANG ADJUSTMENT	2
STYLUS TRACKING FORCE ADJUSTMENT	2
AUTO–RETURN ADJUSTMENT	2
MOTOR REPLACEMENT PROCEDURE	2
DRIVING WAVEFORM ADJUSTMENT	3
CIRCUIT WAVEFORM ANALYSIS	3
TT–4000 TROUBLE SHOOTING CHART	4
CHASSIS WIRING ASSEMBLY	5
POWER SUPPLY CIRCUIT BOARD	5
MOTOR CONTROL CIRCUIT BOARD	6
CIRCUIT VOLTAGE CHARTS	6
ELECTRICAL SCHEMATIC (inserted)	7
TT–4000 MECHANICAL ASSEMBLY (inserted)	8
PARTS LIST	9–10
TT–4000 TECHNICAL SPECIFICATIONS	11
PACKAGING ASSEMBLY	11

SECTION 2. ALIGNMENT-ADJUSTMENTS

This service manual was prepared for qualified technicians familiar with Turntable maintenance and alignment procedure. Review complete adjustment sections before proceeding.

Cartridge Wire Color Code

Before installing a cartridge to the headshell, the wires should be connected to the cartridge. The cartridge or its technical sheet will identify the connection pins. It may be necessary to slightly compress the terminal clips on the headshell wires with your fingers to firm the contact area to the pins. Below is the headshell color-description.

Headshell Wires:

Right Channel Hot. . . . . Red
Right Channel Ground . . . . . .Green
Left Channel Hot . . . . . .White
Left Channel Ground. . . . . .Blue

After wire connections are made, install cartridge mounting screws, provided with the cartridge, through the mounting slots and tighten firmly enough to hold the cartridge in place. Final adjustments are made after the overhang dimension is adjusted.

A. Stylus overhang adjustment
A 45 RPM adaptor is supplied with the TT4000 turntable that will be used for adjusting the overhang dimension. An arrow is marked on the 45 RPM ADAPTOR, and a gradient scale from 11 through 18.

1. Place the adaptor on the spindle with the arrow pointing towards the rear of the turntable. Gradient scale will be in the lower half quadrant when viewed from the front.
2. Remove stylus protective cover and balance the tone arm. Place the tone arm to the gradient scale and set stylus contact to gradient 17 mm on the 45 RPM ADAPTOR. Set the cartridge screws after checking that the cartridge is parallel to the sides of the headshell.

B. Stylus tracking force adjustment
1. Remove stylus protective cover. Adjust the counterweight until tone arm is capable of being suspended in midair without movement.
2. Set the counterweight dial to zero.
3. Rotate the counterweight towards the pivot point to the manufacturers specified cartridge tracking force.
4. Adjust the anti-skate control to the same force as the stylus tracking force.

C. Auto-return adjustment
If the Tone Arm returns before the end of the record program or delays to lift at end of record program, the sending arm can be adjusted as follows. REFER TO FIGURE (1)

1. To slightly delay tone arm return, adjust the fine adjustment screw clockwise.
2. To slightly advance tone arm return, adjust the fine adjustment screw counter clockwise.
3. When larger deviations are necessary, return fine adjustment screw to the middle of its travel.
4. Loosen the sending arm securing screws and adjust the tolerance between the actuating arm and sending-arm assy to 7 mm (.276in.). FIGURE (1)
5. Fine adjust tone arm return by repeating steps one or two, where applicable.

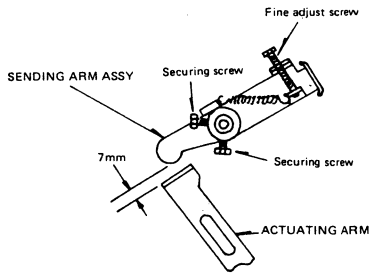

FIGURE (1)

SECTION 3. MOTOR REPLACEMENT PROCEDURE

1. Remove lead wires connected to pins 2-8, 9-11.
2. Remove the motor retaining screws on top of the turntable unit.
3. Remove the motor grounding wire.
4. Guide motor out of the unit.

Reverse procedure for motor installation (Refer to FIGURE 2 for adjustment)

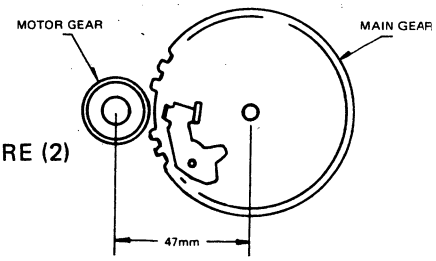

FIGURE (2)

1. Adjust Motor Pulley Distance from main gear (center to center) to 47 mm (1.850 in)
2. Adjust Motor gear to the center of main gear notch. (FIGURE 2)

ELECTRONIC ADJUSTMENTS

Follow alignment sequence for electronic adjustments below.

A. Supply Voltage Verification
B. Phase Lock Alignment
C. Wow and Flutter Alignment

SUPPLY VOLTAGE

Connect a digital voltmeter to Power Supply Board Pins and verify DC voltages.

A. Pin 17-(Ground) C. Pin 15-(−12VDC)
B. Pin 20-(+12VDC) D. Pin 14-(+5VDC)

PHASE LOCK ALIGNMENT

A. Adjust crystal oscillator VC1 trimmer by monitoring (Pin 13) IC-3 for:
   33RPM - 22500 ± 2 Micro-Secs (44.44Hz)
   45RPM - 16666 ± 2 Micro-Secs (60.00Hz)

B. Connect a dual trace scope to (Pin 13) IC-3 and (T.P.) collector X1. Superimpose wave forms and adjust VR4 and VR5. Refer to Figures below.
   33RPM - 14.0 ± 0.4 M Secs. with VR4
   45RPM - 11.0 ± 0.4 M Secs. with VR5

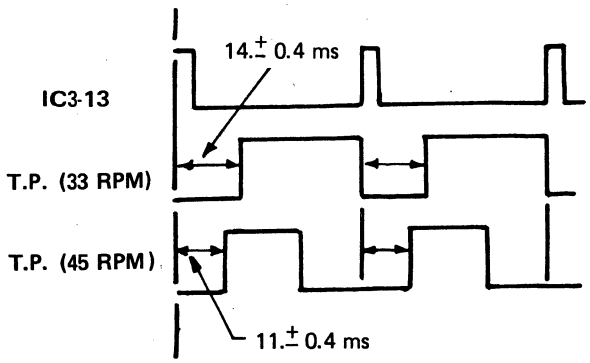

WOW AND FLUTTER ALIGNMENT

It is recommended to align wow and flutter circuit by both methods (meter alignment), (scope alignment) below.

WOW AND FLUTTER METER ALIGNMENT

A. Connect a wow/flutter meter to the amplifier output and adjust VR1-Motor Control Circuit Board for minimum reading.

B. Adjust VR2 and VR3-Motor Control Circuit Board alternately to minimize flutter.

WOW AND FLUTTER SCOPE ALIGNMENT

A. Connect a dual trace scope (Pins 3, 8 Motor Control Circuit Board) and superimpose wave forms. Reference Figures below.

B. Adjust VR1 for amplitude and VR3 and VR4 for 90° phase difference.

NOTE: The Turntable must be level for all wow and Flutter adjustments.

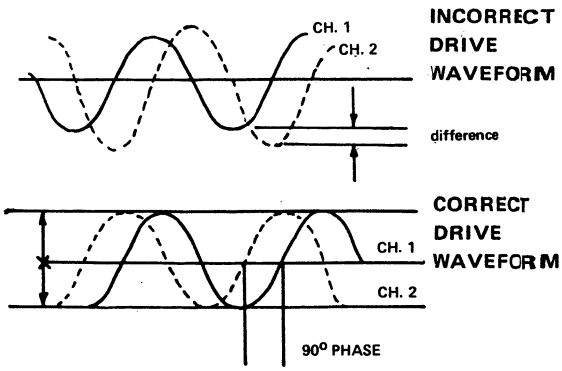

CIRCUIT WAVEFORMS

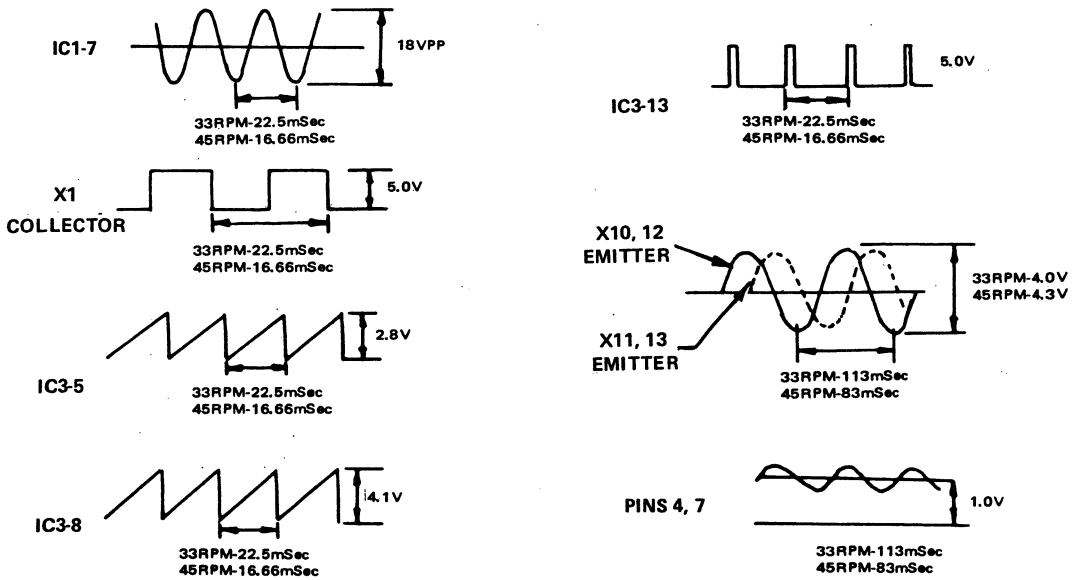

TT-4000 TROUBLE SHOOTING CHART

PROBLEM	SUSPECTED AREA	TASK
Stylus Remains in One Groove	1. Stylus Tracking Force 2. Tone Arm Lead Wires Binding 3. Dirty Clutch Plate-Guide	1. Adjust Stylus Tracking Force 2. Rearrange Lead wires 3. Clean Parts Thoroughly
Loud Sound Impact Heard On Return of Tone Arm	1. Main Gear Teeth	1. Check Gap Between Main Gear and Motor Gear 2. Check Clutch Plate, Guide, Actuating Arm and Base for Dirt or Binding
No Tone Arm Signal Output	1. Cartridge/Stylus 2. Leadwires 3. 5-Pin Terminal Strip 4. Cartridge Wiring	1. Replace 2. Check for Short or Open Wiring 3. Verify Wire Connections 4. Check for Broken Wires
One Channel Distorted	1. Stylus Tracking Force 2. Cartridge Position Incorrect 3. Anti-Skating Force	1. Readjust Tracking Force 2. Mount Cartridge Parallel to Sides of Headshell 3. Readjust Anti-skating Force
No Motor Turn On	1. Fuses 2. Power Supply Wiring	1. Check for Short Circuits and Replace Fuses 2. Check for Visible Wire Damage
Intermittent Motor Start	1. Intermittent Fuse-wiring 2. Intermittent Drive Transistors	1. Replace Fuse-Repair Wire 2a. Verify waveforms @ Pins 3,8 2b. Verify waveforms @ Pins 24, T.P. 2c. Verify D.C.V. IC2-5,3
Motor Speed Inaccurate	1. Speed Range Switch	1. Clean or Replace Switch
Pitch Will Not Hold	1. Pitch Control	1. Clean Pitch Potentiometer
Motor Speed Too Fast or Slow	1. VR4, VR5	1. Verify Pulse width @ T.P. and IC3-13 (refer to alignment)
Motor Speed Too Fast or Slow	1. Incorrect Signal Form In Circuit	1. Verify Correct Waveforms Throughout Circuit after confirming correct DC Voltages
Tone Arm Returns to Arm Rest, Platter Remains on	1. Micro-Switch Adjustment	1. Adjust Gap Between Micro-switch and Sending Arm 0.8–1.2 mm
Reject Button Depressed But Tone Arm Does Not Return	1. Actuating Arm 2. Main Gear Drive	1. Check Reject Button, Spring, Lever Mechanism 2. Check Position of Motor Gear For Correct Position in Notch of Main Gear 3. Check Gear Teeth for Wear

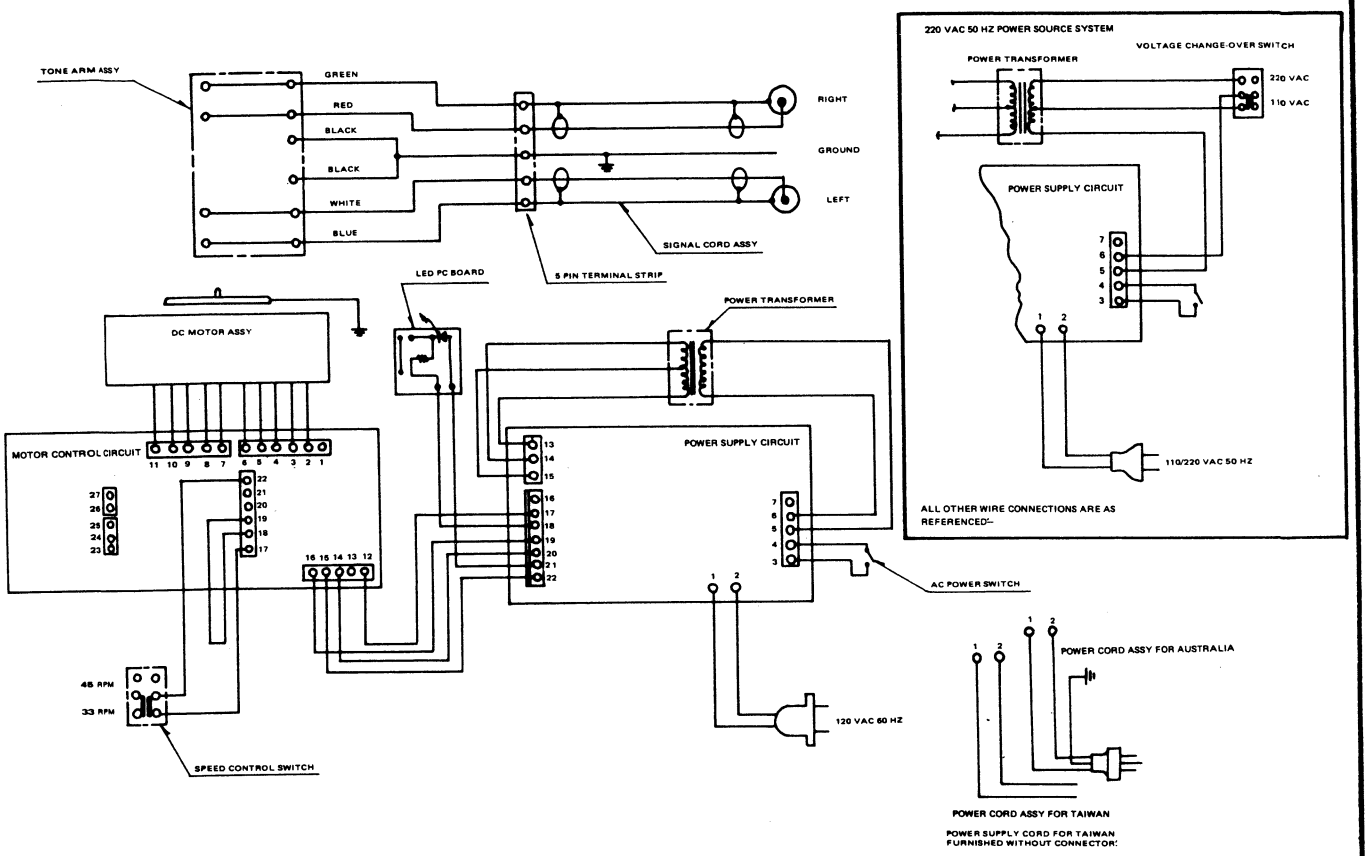

CHASSIS WIRING ASSEMBLY

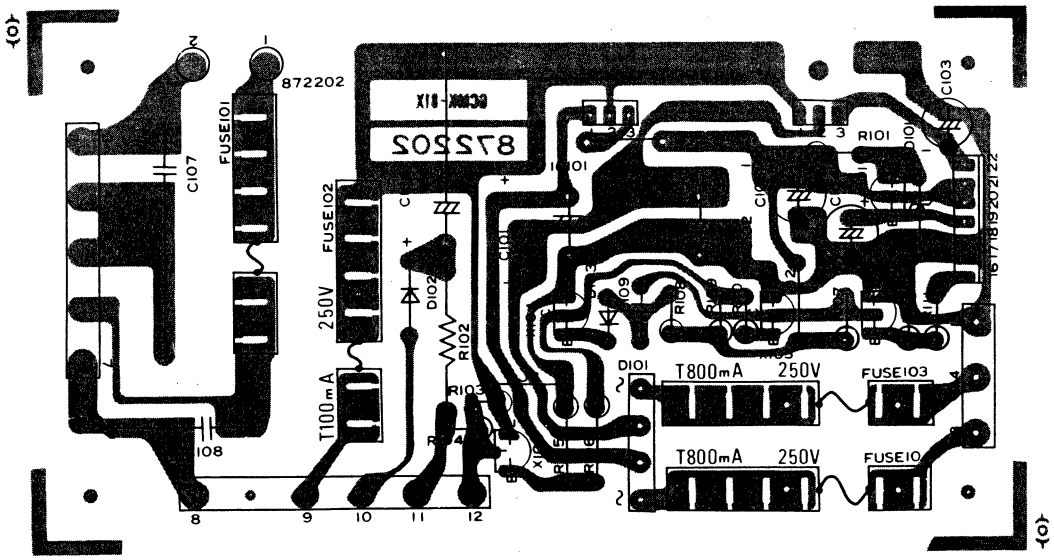

POWER SUPPLY CIRCUIT BOARD

INTEGRATED CIRCUITS			
PIN NO.	IC1	IC2	IC3
1	0V	0V	5.5V
2	1.53V	0.2V	2.17V
3	1.53V	0.3V	1.8V
4	-12.4V	-12.4V	2.62V
5	0V	0.2V	1.25V
6	0V	0.2V	1.60V
7	0.3V	0.2V	1.46V
8	+12.0V	+12.0V	2.87V
9			2.24V
10			2.0V
11			3.0V
12			0V (33RPM) 5V (45RPM)
13			0V
14			5.0V
15			5.0V
16			0V
17			0V
18			5.0V
19			5.0V
20			0V
21			0V
22			0V

TRANSISTORS			
COMPONENT	EMITTER	BASE	COLLECTOR
X1	0V	.06V	2.6V
X2	0V	0.4V	2.6V
X3	0V	0V	2.9V
X4	1.0V	1.3V	11.5V
X5	6.6V	6.7V	5.4V
X6	5.48V	5.6V	1.98V
X7	5.49V	5.48V	4.33V
X8	0V	0.6V	0.01V
X9	0V	.02V	9.72V
X10	1.0V	1.0V	11.7V
X11	1.0V	1.0V	11.7V
X12	1.0V	1.0V	12.4V
X13	1.0V	1.0V	12.4V
X20	0V	0V	9.7V

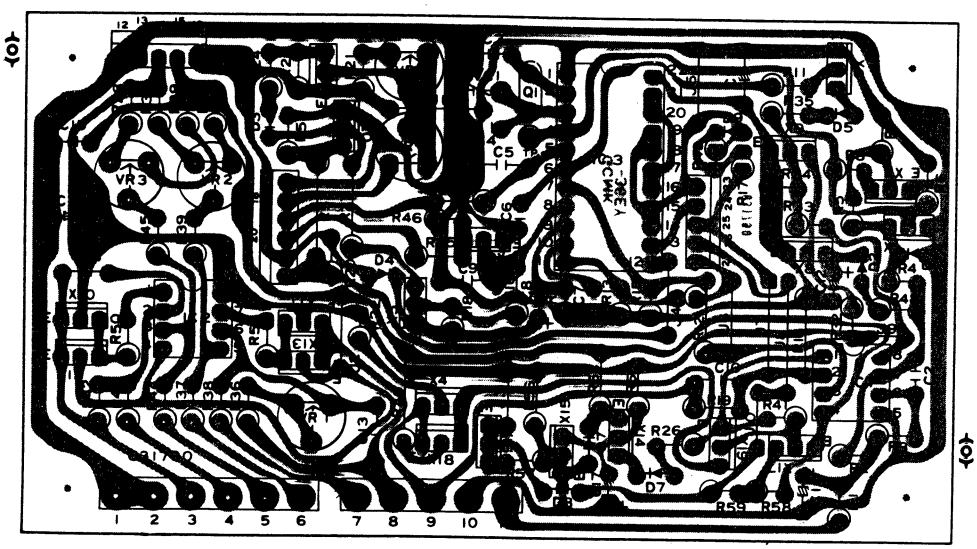

MOTOR CONTROL CIRCUIT BOARD

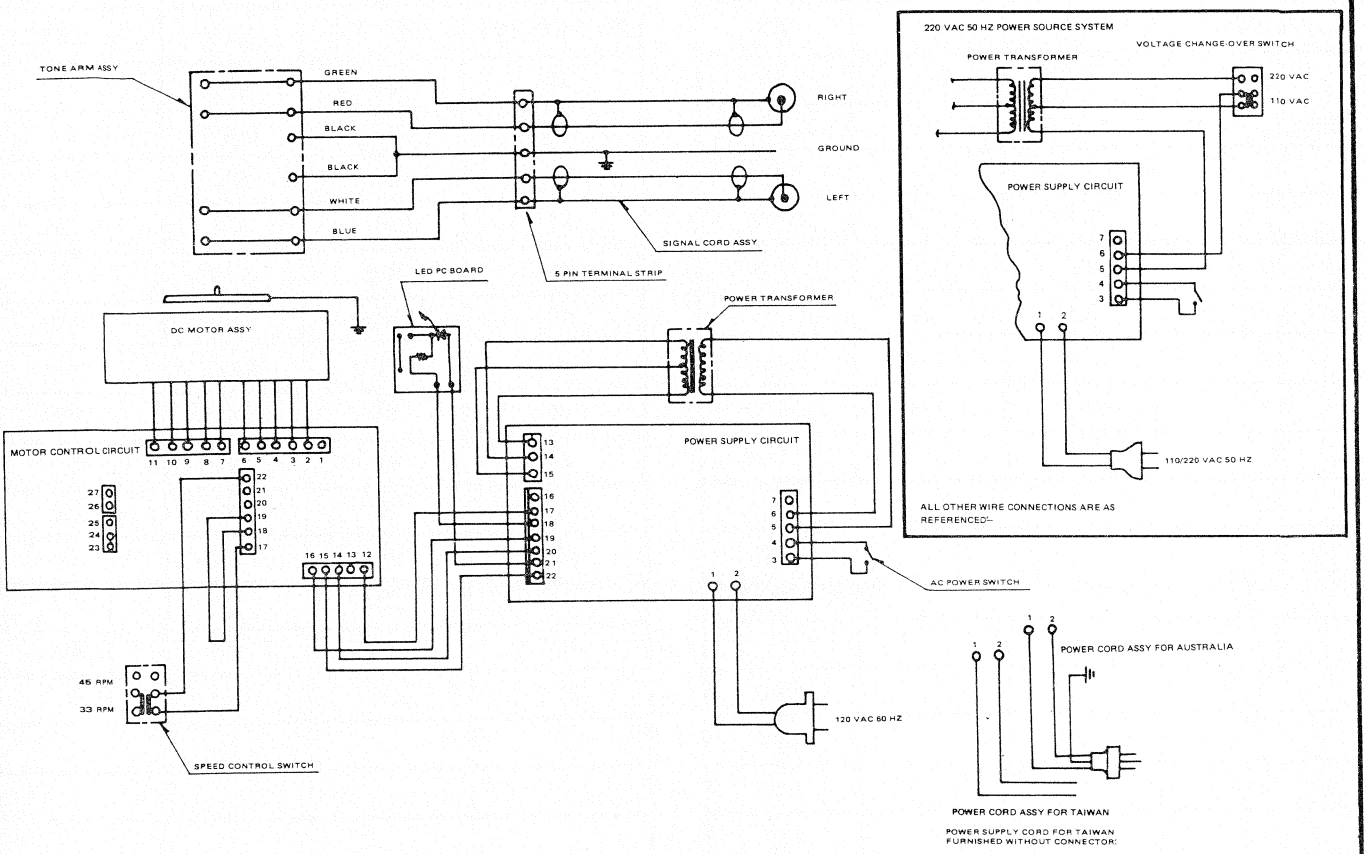

CHASSIS WIRING ASSEMBLY

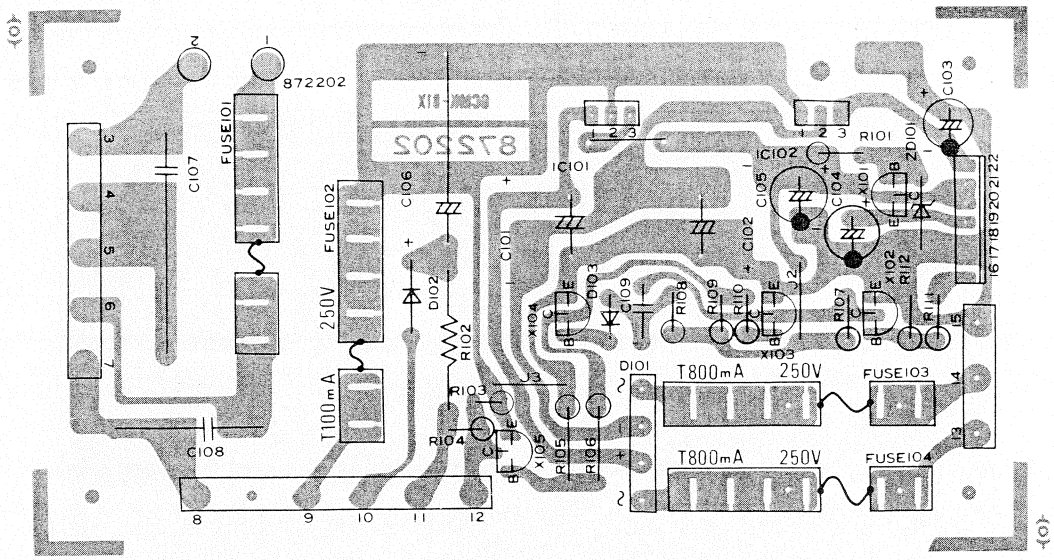

POWER SUPPLY CIRCUIT BOARD

INTEGRATED CIRCUITS			
PIN NO.	IC1	IC2	IC3
1	0V	0V	5.5V
2	1.53V	0.2V	2.17V
3	1.53V	0.3V	1.8V
4	-12.4V	-12.4V	2.62V
5	0V	0.2V	1.25V
6	0V	0.2V	1.60V
7	0.3V	0.2V	1.46V
8	+12.0V	+12.0V	2.87V
9			2.24V
10			2.0V
11			3.0V
12			0V (33RPM) 5V (45RPM)
13			0V
14			5.0V
15			5.0V
16			0V
17			0V
18			5.0V
19			5.0V
20			0V
21			0V
22			0V

TRANSISTORS			
COMPONENT	EMITTER	BASE	COLLECTOR
X1	0V	.06V	2.6V
X2	0V	0.4V	2.6V
X3	0V	0V	2.9V
X4	1.0V	1.3V	11.5V
X5	6.6V	6.7V	5.4V
X6	5.48V	5.6V	1.98V
X7	5.49V	5.48V	4.33V
X8	0V	0.6V	0.01V
X9	0V	.02V	9.72V
X10	1.0V	1.0V	11.7V
X11	1.0V	1.0V	11.7V
X12	1.0V	1.0V	12.4V
X13	1.0V	1.0V	12.4V
X20	0V	0V	9.7V

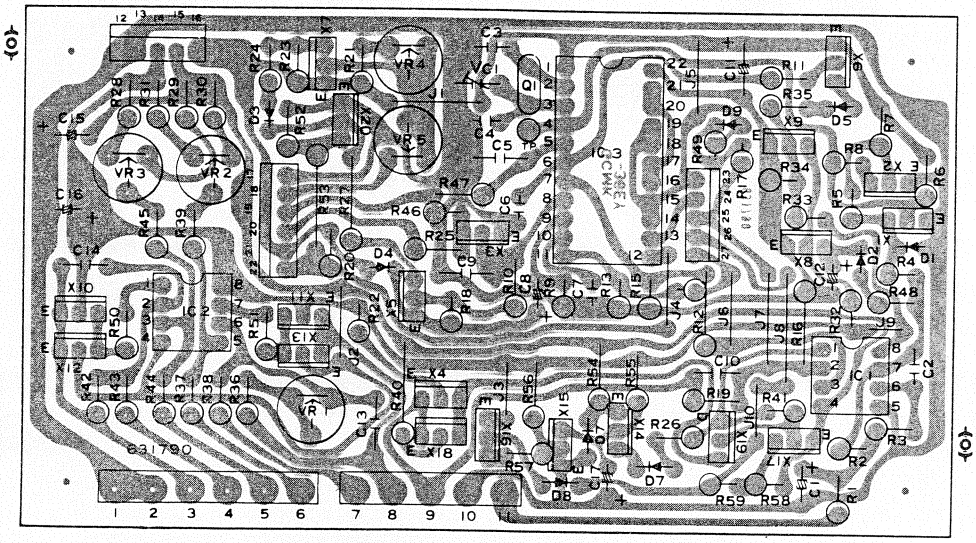

MOTOR CONTROL CIRCUIT BOARD

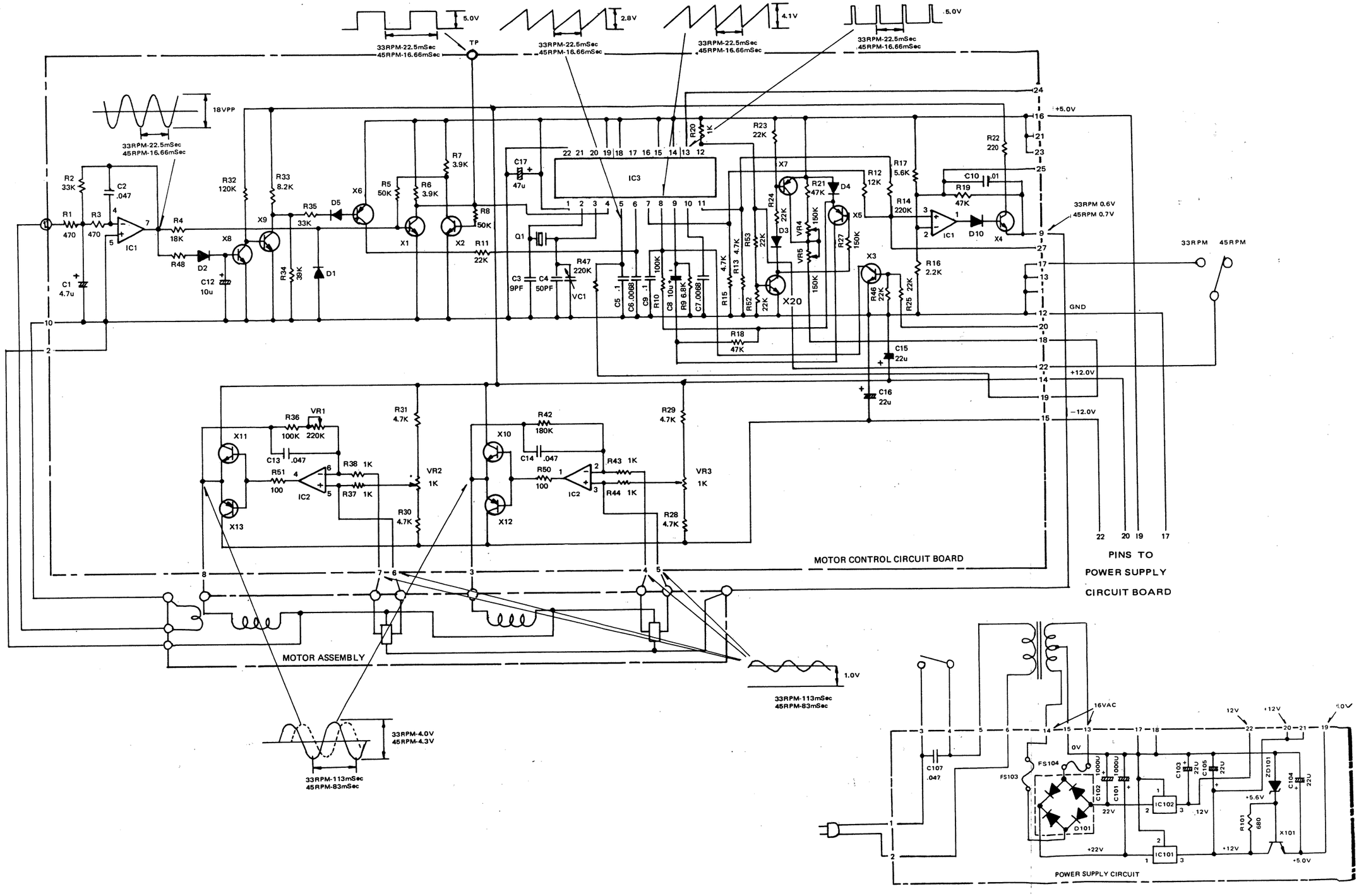

ELECTRICAL SCHEMATIC TT-4000

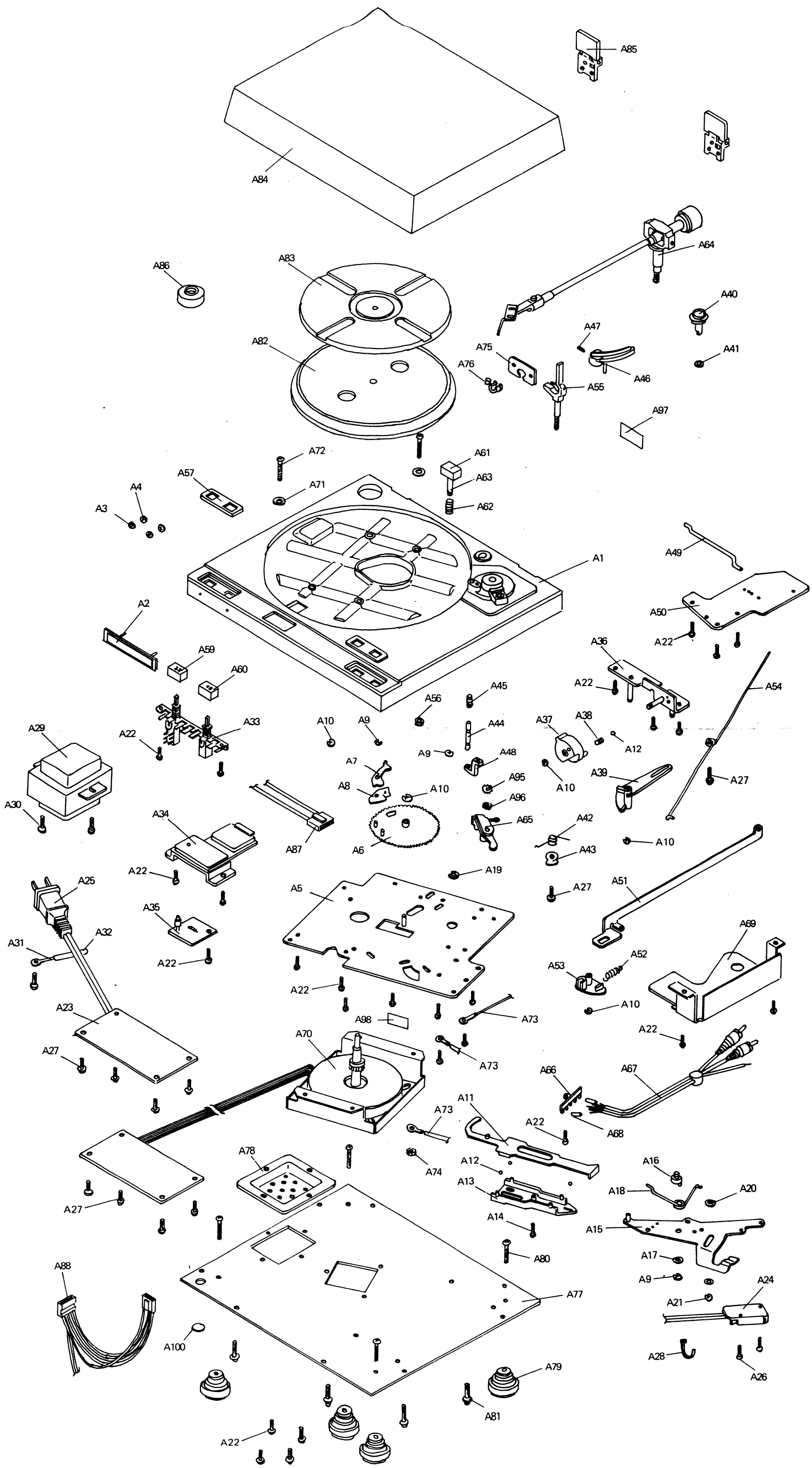

MAIN CHASSIS ASSEMBLY

U UNITED STATES
C CANADA
E EUROPE
T TAIWAN
A AUSTRALIA

marantz®

TT-4000

REF DESIG	QUANTITY U	C	E	T	A	PART NUMBER	DESCRIPTION
							MECHANICAL ASSY
A1	1	1	1	1	1	847306-1	CABINET CASE
A2	1	1	1	1	1	896838	LOGO, MARANTZ
A3	2	2	2	2	2	893215	RUBBER BUSHING
A4	2	2	2	2	2	CS-3	CLIP RETAINING WASHER
A5	1	1	1	1	1	871641-2	SUB-CHASSIS
A6	1	1	1	1	1	895248	GEAR ASSY, REJECT
A7	1	1	1	1	1	894901	PAWL
A8	1	1	1	1	1	894902	PAWL SLIDE
A9	3	3	3	3	3	E-3	E-RING 3mm
A10	5	5	5	5	5	E-32	E-RING 3.2mm
A11	1	1	1	1	1	8709331	ACTUATING ARM
A12	4	4	4	4	4	39688D1A	STEEL BALL
A13	1	1	1	1	1	8709321	ACTUATING BASE
A14	1	1	1	1	1	FMT+3x12	PH RD HD SCREW
A15	1	1	1	1	1	896487	FUNCTION PLATE ASSY
A16	1	1	1	1	1	895073	ECCENTRIC PIN
A17	1	1	1	1	1	BW5x10x02	BRONZE WASHER
A18	1	1	1	1	1	895251	COIL SPRING
A19	1	1	1	1	1	BE-6	SPRING WASHER
A20	1	1	1	1	1	FW32x10x05	WASHER
A21	1	1	1	1	1	E-2	E-RING, 2mm
A22	30	30	30	30	30	BT 3x8	PH TAP BD SCREW
A23	1	1				872296	POWER SUPPLY CIRCUIT ASSY
A23			1	1	1	872372	POWER SUPPLY CIRCUIT ASSY
A24	1	1				891340-1	MICRO-SWITCH
A24			1	1	1	891430-1	MICRO-SWITCH
A25	1	1				892435-1	POWER CORD ASSY
A25				1		870913	POWER CORD ASSY
A25					1	897336	POWER CORD ASSY
A26	2	2	2	2	2	FM+26x14	PH RD HD SCREW
A27	10	10	10	10	10	TPT+3x8	PH TAP SCREW
A28	4	4	4	4	4	894408	WIRE FASTENER
A29	1					872265	POWER TRANSFORMER
A29		1				872266	POWER TRANSFORMER
A29			1			872268	POWER TRANSFORMER
A29				1		872267	POWER TRANSFORMER
A29					1	872269	POWER TRANSFORMER
A30	2	2	2	2	2	FMT+4x10	PH RD HD SCREW
A31	4	4	4	4	4	890755	LUG, TERMINAL
A32	4	4	4	4	4	UL3x50L	SLEEVE, LUG
A33	1	1	1	1	1	851896	PUSH SWITCH ASSY
A34	1	1	1	1	1	898342	BRACKET LED HOLDER
A35	1	1	1	1	1	898558	LED BOARD ASSY
A36	1	1	1	1	1	898328	CUEING BRACKET ASSY
A37	1	1	1	1	1	898329	CUEING KNOB
A38	1	1	1	1	1	E287680	CAM SPRING
A39	1	1	1	1	1	897818	REJECT LEVER
A40	1	1	1	1	1	898332	ANTI-SKATE KNOB
A41	1	1	1	1	1	897554	SPRING WASHER
A42	1	1	1	1	1	897445	SPRING, ANTI-SKATE
A43	1	1	1	1	1	897547	CAM, ANTI-SKATE
A44	1	1	1	1	1	898525	ELEVATION SHAFT
A45	1	1	1	1	1	E832780	ELEVATION SPRING
A46	1	1	1	1	1	897816	ELEVATION PLATE
A47	1	1	1	1	1	FT-26x4	SCREW, FT HD
A48	1	1	1	1	1	895676	CUEING ARM VISCUOUS
A49	1	1	1	1	1	898526	CUEING LEVER
A50	1	1	1	1	1	898751	CUEING BASE
A51	1	1	1	1	1	898334	CUEING ARM
A52	1	1	1	1	1	898533	COIL SPRING
A53	1	1	1	1	1	898335	CUEING CAM
A54	1	1	1	1	1	898527	REJECT SPRING
A55	1	1	1	1	1	897822	TONE ARM REST ASSY
A56	1	1	1	1	1	FLN3	FLANGE NUT 3mm
A57	1	1	1	1	1	898336-1	NAMEPLATE OVERLAY
A58	1	1	1	1	1	898337	CUEING OVERLAY
A59	1	1	1	1	1	898528-2	PUSH BUTTON (33)
A60	1	1	1	1	1	898528-3	PUSH BUTTON (45)
A61	1	1	1	1	1	898528-1	REJECT BUTTON
A62	1	1	1	1	1	892084-1	SPRING, REJ. BUTTON
A63	1	1	1	1	1	897843	SHAFT, REJ. BUTTON
A64	1	1	1	1	1	851832	TONE ARM ASSY
A65	1	1	1	1	1	893583-3	SENDING ARM ASSY
A66	1	1	1	1	1	890979	5 LUG TERMINAL STRIP
A67	1	1	1	1	1	871474-2	PHONO OUTPUT CABLE
A69	1	1	1	1	1	898752	SHIELD PLATE
A70	1	1	1	1	1	DDM-511QF-60	MOTOR ASSY
A71	4	4	4	4	4	FW42x12x1	WASHER
A72	4	4	4	4	4	CT+4x20	PH. RD HD SCREW
A73	2	2	2	2	2	894383-1	GROUND WIRE ASSY
A74	1	1	1	1	1	FLN4	LOCK NUT, 4mm
A75	1	1				892624-3	POWER CORD BRACKET
A75			1	1		893037-3	POWER CORD BRACKET

REF DESIG	QUANTITY U	C	E	T	A	PART NUMBER	DESCRIPTION
A75					1	893037	POWER CORD BRACKET
A76	1	1				891568-0	POWER CORD BUSHING
A76			1	1		891568-3	POWER CORD BUSHING
A76					1	891569-4	POWER CORD BUSHING
A77	1	1	1	1	1	872212	BOTTOM LID
A78	1	1	1	1	1	898530	TRANSFORMER COVER
A79	4	4	4	4	4	895773-2	RUBBER FEET
A80	4	4	4	4	4	FM+4x14	PH RD HD SCREW
A81	11	11	11	11	11	TPT+4x14	PH TAP SCREW
A82	1	1	1	1	1	620061	TURNTABLE PLATTER
A83	1					872283	PLATTER MAT
A83		1	1	1	1	872283-1	PLATTER MAT
A84	1	1	1	1	1	851888-1	DUST COVER
A85	2	2	2	2	2	898532	HINGE ASSY
A86	1	1	1	1	1	898340	ADAPTOR, 45RPM
A87	1	1	1	1	1	898555	CONNECTOR ASSY (1)
A88	1	1	1	1	1	898559	CONNECTOR ASSY (2)
A89			1			896544-1	VOLT CHANGE SWITCH
A90			1			37X15L	INSULATION TUBING
A91			2			FM+3x8	PH RD HD SCREW
A92			1			891799	VOLTAGE PLATE
A93			1	1	1	893327	INSULATION SHEET
A94			1	1	1	894756	COVER FOR SENDING ARM
A95	1	1	1	1	1	W10	STAR WASHER
A96	1	1	1	1	1	M10	LOCK NUT, 10mm
A97	1					898572	LABEL ID
A97		1				898572-1	LABEL ID
A97			1			898572-2	LABEL ID
A97				1		898572-3	LABEL ID
A97					1	898572-4	LABEL ID
A98	1					894783-2	FUSE LABEL
A98		1				895019	FUSE LABEL
A99	1		1	1	1	893389	CAUTION LABEL
A99		1				895020	CAUTION LABEL
A100	1	1	1	1	1	898753	ACCESS PAD
							ELECTRICAL PARTS MOTOR CONTROL BOARD
							SEMI-CONDUCTORS
IC1, IC2	1	1	1	1	1	NJM4558D	INTEGRATED CIRCUIT
IC3	1	1	1	1	1	SM6415A4S	INTEGRATED CIRCUIT
Q1	1	1	1	1	1	HC18C	CRYSTAL, 9.3312 MHZ
X1-4, 8, 9, 20	7	7	7	7	7	2SC945	TRANSISTOR, P, Q, K
X5-7	3	3	3	3	3	2SC733	TRANSISTOR, Q, P
X10, 11	2	2	2	2	2	2SD667	TRANSISTOR, B, C
X12, 13	2	2	2	2	2	2SB647	TRANSISTOR, B, C
D1-5, 10	5	5	5	5	5	IS953	DIODE
							CAPACITORS
C3	1	1	1	1	1	SC3-09P0-50V	CAP. CERAMIC 9PF
C4	1	1	1	1	1	SC3-50P0-50V	CAP. CERAMIC 50PF
C6, 7	2	2	2	2	2	SC2-68M4-50V	CAP, POLY 0.0068UF
C10	1	1	1	1	1	SC2-01M2-50V	CAP. POLY-0.01UF
C2, 13, 14	3	3	3	3	3	SC2-4MM3-50V	CAP. POLY 0.047UF
C5, 9	2	2	2	2	2	SC1-01M1-50V	CAP. ELECTRO 0.1UF-50V
C1	1	1	1	1	1	SC1-47M1-25V	CAP. ELECTRO 4.7UF-25V
C8, 12	2	2	2	2	2	SC1-10M0-25V	CAP. ELECTRO 10UF-25V
C15, 16	2	2	2	2	2	SC1-22M0-25V	CAP. ELECTRO 22UF-25V
C17	1	1	1	1	1	SC1-47M0-25V	CAP. ELECTRO 47UF-25V
VC1	1	1	1	1	1	SC4-20P0-50V	CAP. TRIMMER

U UNITED STATES
C CANADA
E EUROPE
T TAIWAN
A AUSTRALIA

marantz®

TT-4000

REF DESIG	QUANTITY U	C	E	T	A	PART NUMBER	DESCRIPTION
							RESISTORS
							RESISTORS ARE 1/4W-5% UNLESS OTHERWISE STATED
R50, 51	2	2	2	2	2	SR1-0100-104	RESISTOR, CARBON 100 ohm - ¼W
R22	1	1	1	1	1	SR1-0220-104	RESISTOR, CARBON 220 ohm - ¼W
R1, 3	2	2	2	2	2	SR1-0470-104	RESISTOR, CARBON 470 ohm - ¼W
R20, 37, 38	3	3	3	3	3	SR1-01K0-104	RESISTOR, CARBON 1K ohm - ¼W
R43, 44	2	2	2	2	2	SR1-01K0-104	RESISTOR, CARBON 1K ohm - ¼W
R16	1	1	1	1	1	SR1-22KI-104	RESISTOR, CARBON 2K ohm - ¼W
R6, 7	2	2	2	2	2	SR1-39KI-104	RESISTOR, CARBON 3.9K ohm - ¼W
R13, 15, 48	3	3	3	3	3	SR1-47KI-104	RESISTOR, CARBON 4.7K ohm - ¼W
R28-31	4	4	4	4	4	SR1-47KI-104	RESISTOR, CARBON 4.7K ohm - ¼W
R17	1	1	1	1	1	SR1-56KI-104	RESISTOR, CARBON 5.6K ohm - ¼W
R9	1	1	1	1	1	SR1-68KI-104	RESISTOR, CARBON 6.8K ohm - ¼W
R33	1	1	1	1	1	SR1-82KI-104	RESISTOR, CARBON 8.2K ohm - ¼W
R12	1	1	1	1	1	SR1-12K0-104	RESISTOR, CARBON 12K ohm - ¼W
R4	1	1	1	1	1	SR1-18K0-104	RESISTOR, CARBON 18K ohm - ¼W
R11	1	1	1	1	1	SR1-22K0-104	RESISTOR, CARBON 22K ohm - ¼W
R23, 24, 25	3	3	3	3	3	SR1-22K0-104	RESISTOR, CARBON 22K ohm - ¼W
R46, 52, 53	3	3	3	3	3	SR1-22K0-104	RESISTOR, CARBON 22K ohm - ¼W
R2, 35	2	2	2	2	2	SR1-33K0-104	RESISTOR, CARBON 33K ohm - ¼W
R34	1	1	1	1	1	SR1-39K0-104	RESISTOR, CARBON 39K ohm - ¼W
R18, 19, 21	3	3	3	3	3	SR1-47K0-104	RESISTOR, CARBON 47K ohm - ¼W
R5, 8	2	2	2	2	2	SR1-50K0-104	RESISTOR, CARBON 50K ohm - ¼W
R10, 36	2	2	2	2	2	SR1-100K-104	RESISTOR, CARBON 100K ohm - ¼W
R32	1	1	1	1	1	SR1-120K-104	RESISTOR, CARBON 120K ohm - ¼W
R27	1	1	1	1	1	SR1-150K-104	RESISTOR, CARBON 150K ohm - ¼W
R39, 42, 45	3	3	3	3	3	SR1-180K-104	RESISTOR, CARBON 180K ohm - ¼W
R14, 47	2	2	2	2	2	SR1-220K-104	RESISTOR, CARBON 220K ohm - ¼W
VR1	1	1	1	1	1	SR2-220K-B	POT, TRIMMER 220K ohm
VR2, 3	2	2	2	2	2	SR2-001K-B	POT, TRIMMER 1K ohm
VR4, 5	1	1	1	1	1	SR2-150K-B	POT, TRIMMER 150K ohm
							LED CIRCUIT
1	1	1	1	1	1	898557	LED
2	1	1	1	1	1	SR1-01K0-104	RESISTOR, CARBON 1K ohm - ¼W
3	1	1	1	1	1	898288	CIRCUIT BOARD

REF DESIG	QUANTITY U	C	E	T	A	PART NUMBER	DESCRIPTION
							ELECTRICAL PARTS POWER SUPPLY BOARD
1	1	1	1	1	1	872202	CIRCUIT BOARD
C107	1	1				896960	CAPACITOR 0.047 125V
C107			1	1	1	8924282	CAPACITOR 0.022 250V
D101	1	1	1	1	1	RB-151	DIODE BRIDGE
6	4	4				893395-1	FUSE HOLDER
6			4	4	4	893395	FUSE HOLDER
7	2	2	2	2	2	893790-4	FUSE LABEL
F103, 104	2	2				704395-2	FUSE, 1A-250V
F103, 104			2	2	2	893791-3	FUSE, 800MA -250V
C103, 104	2	2	2	2	2	SCI-22MO-25V	CAPACITOR, ELECTRO 22UF-25V
C105	1	1	1	1	1	SCI-22MO-25V	CAPACITOR, ELECTRO 22UF-25V
ZD101	1	1	1	1	1	RO56EB2	DIODE, ZENER 5.6V
X101	1	1	1	1	1	2SC945	TRANSISTOR, Q, P, K
R101	1	1	1	1	1	SR1-0680-104	RESISTOR, CARBON 680 ohm -¼W
15	1	1	1	1	1	704892	HEAT SINK, IC-2425-MT
16	2	2	2	2	2	BT+-3X10	SCREW, PH 3 x 10MM
IC102	1	1	1	1	1	FS7912M	INTEGRATED CIRCUIT
18	2	2	2	2	2	FM+-3X10	SCREW, PH 3 x 10MM
19	2	2	2	2	2	T02-20	WASHER, SQUARE
C101, 102	2	2	2	2	2	SC1-1000-25V	CAP, ELECTRO. UF-25V
IC102	1	1	1	1	1	FS7812	INTEGRATED CIRCUIT UA7812C
							PACKING MATERIALS
P1			1	1	1	851950	OWNER'S MANUAL
P2	1	1	1	1	1	851883	END PAD
P3	1	1	1	1	1	500X550X05	POLY SHEET
P4	1	1	1	1	1	851888-1	DUST COVER
P5	1	1	1	1	1	8912641	POLY SHEET
P6	1	1	1	1	1		UNIT
P7	1	1	1	1	1		HEAD SHELL
P8	1	1	1	1	1		COUNTERWEIGHT
P9	1	1	1	1	1		(45) ADAPTOR
P10	1	1	1	1	1	851834B	PARTS PAD
P11	1	1	1	1	1	851833	END PAD
P12	1	1	1	1	1	620061	PLATTER
P13	1	1	1	1	1	872283-1	PLATTER MAT
P14	1	1	1	1	1	340X570X03	POLY BAG
P15	1	1	1	1	1	851834A	LOWER PAD
P16	1	1	1	1	1	8518342	CARTON
P17	1	1	1	1	1	872363	PACKING INSTRUCTIONS

TT-4000

TECHNICAL SPECIFICATIONS
GENERAL

Drive System	Direct Drive
Drive Motor Type	Brushless, Slotless, Coreless 8 Pole, 2 Phase
Control Range	Quartz Lock
Rumble (Din B)	-72dB
Wow/Flutter (WRMS)	0.025%
Effective Tone Arm Length	8.5in/216mm
Platter Diameter	2.6in/320mm
Stylus Overhang	0.67 in/17mm
Tracking Force Range	0-4 grams
Anti-Skating Force Range	0-4 grams
Maximum Tracking Error	0.22 deg/cm
Average Tracking Error	0.07 deg/cm
Power Requirement	120V, 60Hz-6 Watts and/or Universal Applications
Dimensions	17 3/8in (441mm) x 5 1/2in (140mm) x 15in (381mm) HxWxD
Weight	14.25lbs (6.5Kg)

PACKING ASSEMBLY

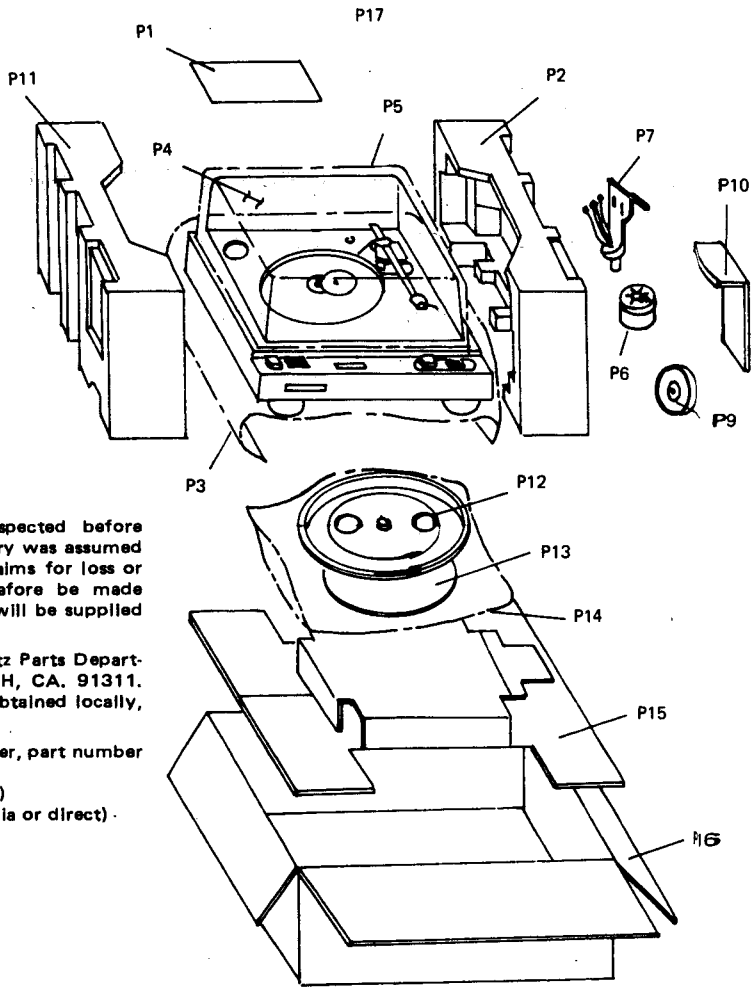

NOTE:

1. This merchandise was thoroughly packed and inspected before leaving our factory. Responsibility for its safe delivery was assumed by the carrier upon acceptance of the shipment. Claims for loss or concealed damage, sustained in transit, must therefore be made upon the carrier. Forms required to file such claims will be supplied by the carrier.
2. Replacement parts may be ordered from the Marantz Parts Department, 20525 NORDHOFF STREET, CHATSWORTH, CA. 91311. ITEMS Such as screws and other hardware may be obtained locally, using the description provided.

When ordering replacement parts, specify model number, part number and description.

For telephone orders, dial: 1-800-423-5108 (toll free)
1-213-998-9333 (California or direct)
Ask for National Parts